OKC 200–300 NTRR/SOL

- Optimised exchanger surfaces for solar collectors and other sources of power
- Storage tank includes 2 sensor pockets
- Installation of TJ 6/4" electrical heating unit possible
- Better layering of hot water thanks to modified dimensions
- Storage tanks can be used as main water heating storage tank or as pre-heating storage tank before existing hot water storage tank
- Side flange used solely as an inspection hole

Note: ** The heater is supplied with a 6 bar safety valve.

OKC 200, 250 NTRR/SOL

OKC 300 NTRR/SOL

Types of storage tanks		OKC 200 NTRR/SOL	OKC 250 NTRR/SOL	OKC 300 NTRR/SOL
Capacity	[l]	200	242	275
Weight of the empty water heater	[kg]	104	109	125
Insulation thickness	[mm]	42	42	48
Thermal conductivity of the insulation	[W·m^{-1}·K^{-1}]	0,022		
Max. working temperature / overpressure in tank	[°C]/[bar]	90/10 **		90/10
Heat transfer surface of the exchanger (top/bottom)	[m^2]	0,8/0,8	0,8/1	0,8/1,2
Capacity of the exchanger (top/bottom)	[l]	7/5,5	7/7	5,5/8,5
Max. working temperature / overpressure in tank	[°C]/[bar]	110/10		
Power of the exchanger at the 720 l at 80 °C (top/bottom)	[kW]	19/19	19/24	19/29
Heating time by the exchanger from 10 °C to 60 °C	[min]	23/34	26/33	25/33
Energy efficiency class		C	C	C
Static loss	[W]	82	87	85

Dimensions [mm]	A	B	C	D	E	F	G	I	J	K	L	M	N	O
OKC 200 NTRR/SOL	1377	607	78	584	208	516	–	668	355	920	820	708	1016	1278
OKC 250 NTRR/SOL	1557	607	78	584	208	648	–	840	355	1100	1000	888	1196	1458
OKC 300 NTRR/SOL	1791	678	74	600	204	754	249	948	369	1165	904	1014	1322	1674

Inlet/outlet no. 1	3/4" outer
Inlet/outlet no. 2	3/4" inner
Inlet/outlet no. 3	1/2" inner
Inlet/outlet no. 4	6/4" inner

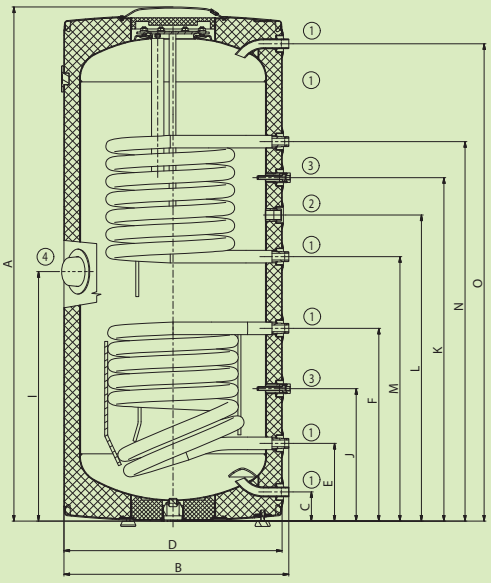

OKC 200, 250 NTRR/SOL

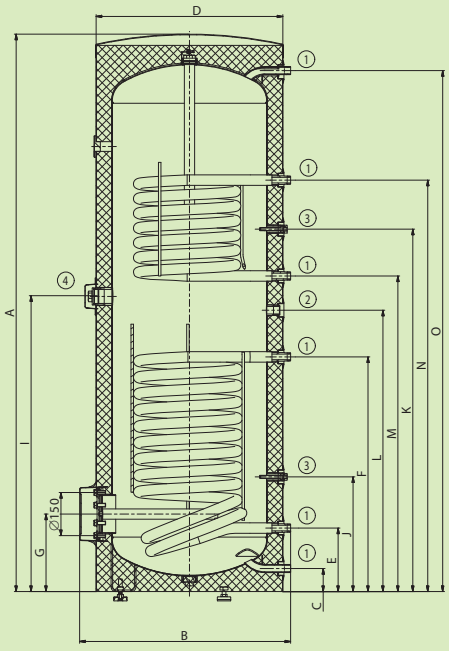

OKC 300 NTRR/SOL

Contact: